PAGE	341

BY	CHK	REVISION RECORD MODIFICATIONS	DATE	REV.
ALLEN		RELEASE TO PRODUCTION	2007,9,6	1.0

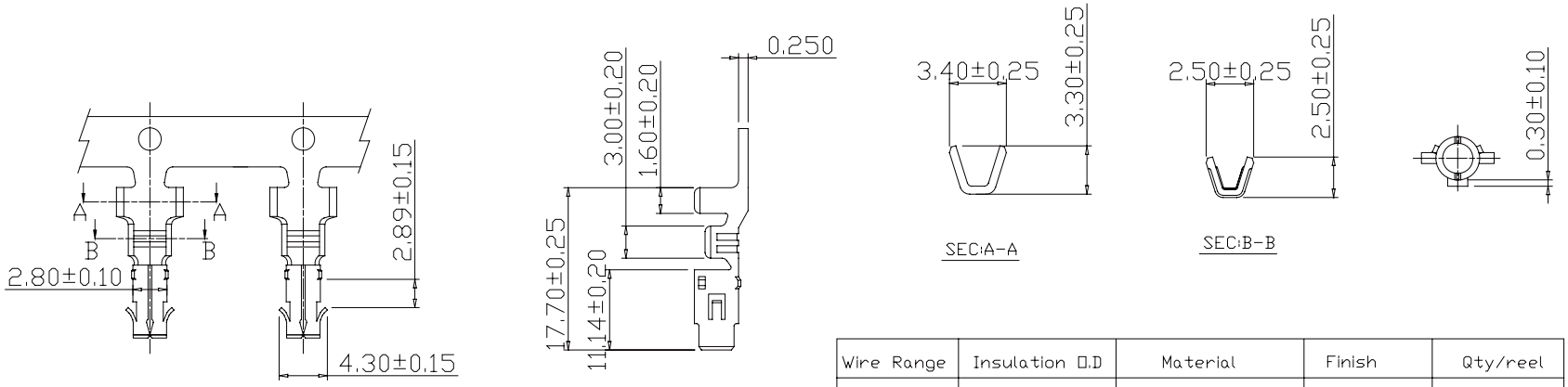

Wire Range	Insulation O.D	Material	Finish	Qty/reel
AWG#18-#24	2.50mm(max)	Brass	Tin-plated	7,000pcs

PartNo.:5082-FT-L

SPECIFICATIONS
Current Rating: 7A AC,DC
Voltage Rating: 250V AC,DC
Temperature Range: -25℃ ~ +85℃
Contact Resistance: 10mΩ Max
Insulation Resistance: 1000mΩ Min
Withstanding Voltage: 1500V AC/minute
Material: Nylon 66, UL94V-2
Color: Natural(Translucent)

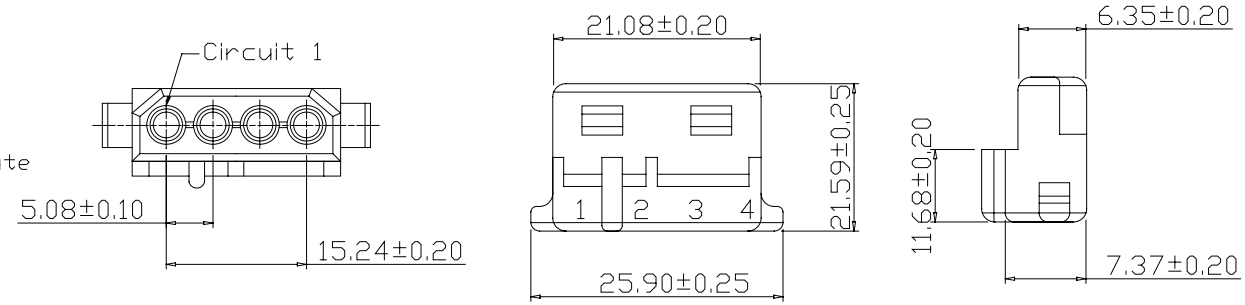

PartNo.:5082H-F04W-L

APPRO	CHECK	DRAWN	PART NO.	Part No.:5082H-F04W-L			DESCRIPTION	VIGORTEC
			ITEM NO.					
			DRAW NO.					
			UNIT	mm	SCALE	no		
			TOLER		NO.		Tel: 0769 22020068 Fax: 0769 22020069 E-mail: sales@vigortec.com	